ITT	PumpSmart PS200 Drive Dimensions and Ratings Frame R2-NEMA1/IP21	**PUMP**SMART

PumpSmart PS200 Pump and Motor Control System

The PumpSmart PS200 is a pump and motor control system that provides integral starting, right-sizing, pump protection and process control for all pumping applications. The PumpSmart PS200 is based upon the ABB ACS800 variable frequency drive platform. PumpSmart Control Solutions has worked with ABB to incorporate proprietary pump protection, process control and configuration algorithms into the drive to make it more suitable for pumping applications

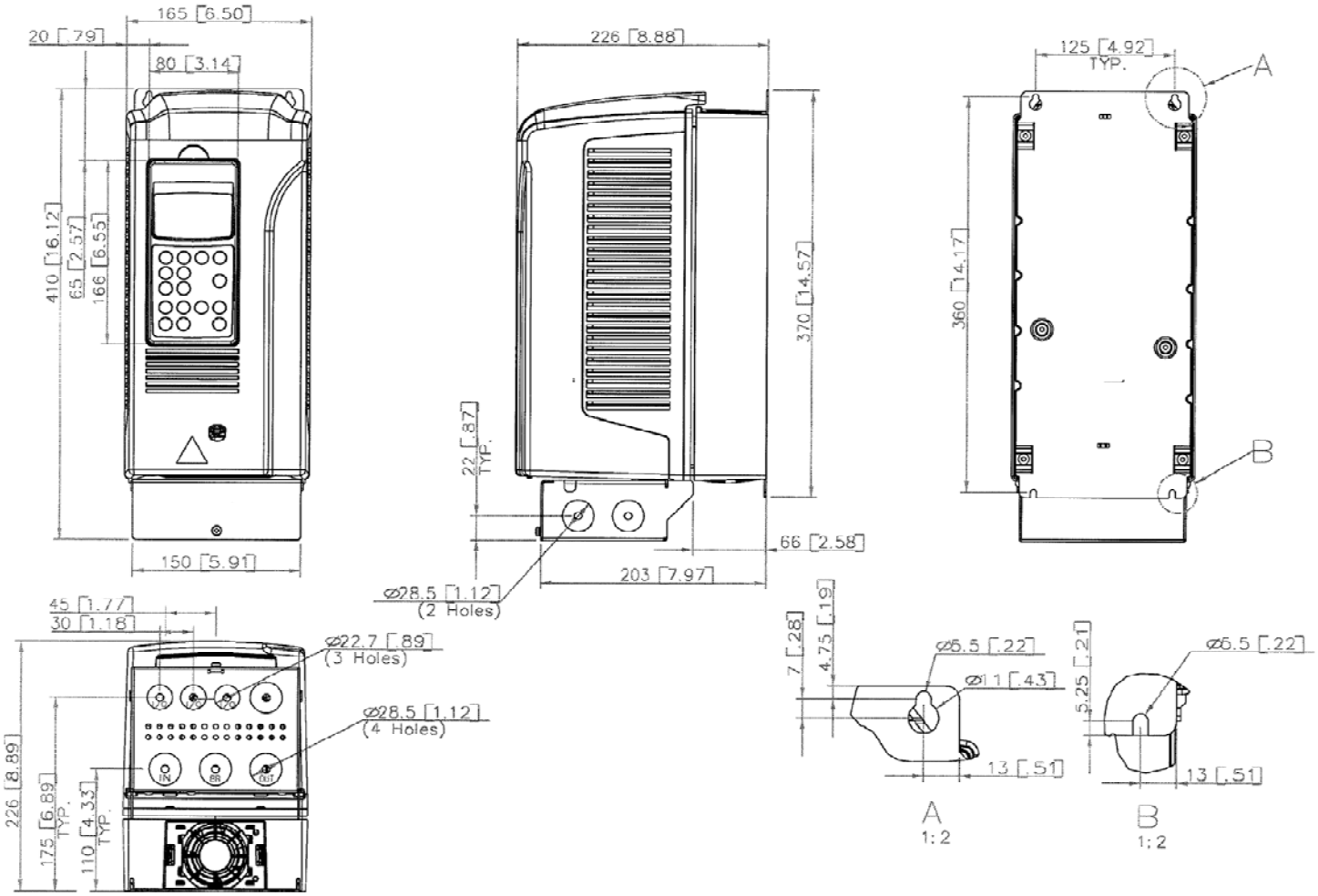

Drive Dimensions

Frame	Height mm [inches]	Width mm [inches]	Depth mm [inches]	Weight kg [lbm]
R2	410 [16.12]	165 [6.5]	226 [8.89]	9 [20]

*Dimensions not for construction

Copyright 2006 ITT Corp. No reproduction without permission	Drawing is not to scale Dimensions in mm(inches)	ISSUE:	Drawn: JCS 5-22-06 Checked: AES 5-22-06	Drawing A08776A	Revision 0	Sheet 1 of 3

Drive Ratings

ITT P/N	Input Voltage VAC	Power P_N[1]		Nominal Current I_{2N}[2] Amps IEC/NEMA	Heat Dissipation		Air Flow		Frame	Enclosure Rating	Recommended Main Fuses		
		KW	HP		Watts	BTU/hr	M^3/hr	CFM			IEC269gG (A)	UL class T (A)	Bussmann Type
A08098A01	230	1.5	2	7.7/8.1	103	350	36	21	R2	NEMA 1 IP21	10	10	JJS-10
A08098A02	230	2.2	3	10.2/11	120	410					16	15	JJS-15
A08100A01	380*/460	2.2	3	5.6/6.2	141	480					10	10	JJS-10
A08100A02	380*/460	3	5	7.7/8.1	161	550					10	10	JJS-10
A08100A03	380*/460	4	7.5	10/11	202	690					16	15	JJS-15
A08100A04	380*/460	5.5	10	12/14	252	860					16	20	JJS-20

[1] P_N - Nominal Power Rating at listed voltage rating for variable torque loads
[2] I_{2N} - Continuous base current with 10% overload for 1 min / 5 minutes
* KW rating applies to drives with 380VAC input voltage

Power Cabling Schematic

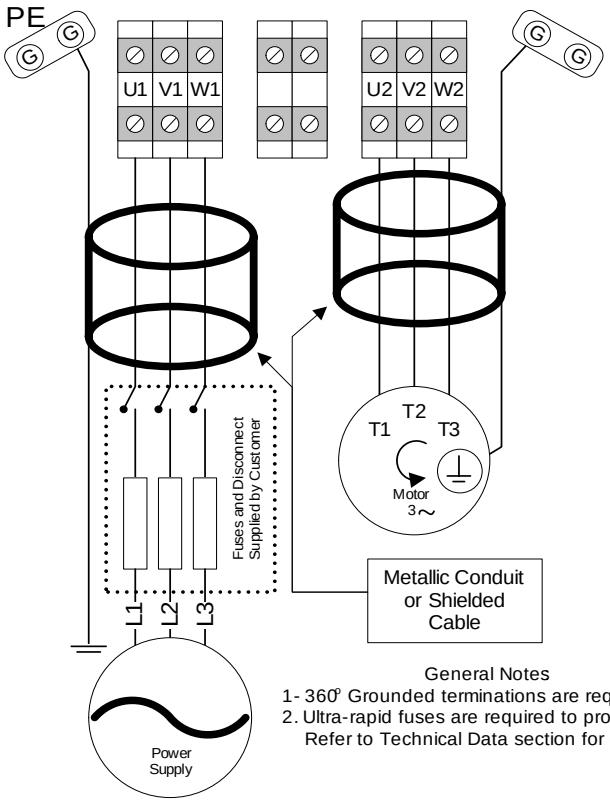

General Notes
1- 360° Grounded terminations are required
2. Ultra-rapid fuses are required to protect drive
Refer to Technical Data section for details

Frame Size	U1/V1/W 1 - U2/V2/W2 R+,R- Terminals				Earthing PE Terminal			
	Max. Wire Size		Torque		Max. Wire Size		Torque	
	mm^2	AWG	Nm	Lb-ft	mm^2	AWG	Nm	Lb-ft
R2	16 *	6 *	1.2-1.5	.9-1.1	10	8	1.5	1.1

* 6 AWG(16 mm^2) rigid solid cable, 8 AWG(10 mm^2) flexible stranded cable

Copyright 2006 ITT Corp.
No reproduction without permission

PumpSmart® PS200

Drive Hardware: ABB ACS800 -6 Pulse PWM

CERTIFICATIONS

600 VAC and Below
UL Listed — CSA Certified
Canadian UL Listed — CE Marked

INPUT POWER

Voltage…… 208...690 VAC 3 Phase ±10%
Overload…… 110% for 1 min/5 min, 140-150% for 10 sec at startup
Frequency…… 48...63Hz

Fundamental Power Factor ($COS\Phi_1$)…… $COS\Phi_1$ = 0.98 (fundamental)
$COS\Phi_1$ = 0.93...95 (total)
Efficiency…… 98% (at nominal power)

MOTOR CONNECTION

Voltage…… 0..V_{1in}/V_{3in}

Frequency…… 0...300 Hz
0...120 Hz with dV/dT Filters

Motor Control…… ABB Direct Torque Control Software
Speed Control…… Static Accuracy:10% of Motor Slip
Dynamic Accuracy: 0.3-0.4% second with 100% Torque Step

ENVIRONMENTAL LIMITS

Enclosures…… NEMA 1/IP21
NEMA 12/IP54

Temperature…… 5...104° F(-15 to 40°C) Standard
104..122° F (40-50 C) with de-rating (1%/1 C)

Humidity…… 5...95% Relative Humidity

Altitude…… 0...3300 Ft (0...1000M) Standard
3300..13,123Ft (1000..4000M) with de-rating (1%/100M)

Vibration…… Max. 1 mm (0.04 in.) 5-13.2 HZ
Max. 7 m/s^2 (23 ft/s^2) 13.2 – 100 HZ, Sinusoidal

Shock, Free Fall …… Not Allowed

STANDARD INPUT/OUTPUT

2 Current Analog Inputs…… 4...20mA
100Ω Input Resistance
11 bit resolution

1 Voltage Analog Input…… 2-10 VDC
200Ω Input Resistance
11 bit resolution
Galvanically isolated as a group

2 Current Analog Output…… 4...20mA
700Ω Max load impedance
10 bit resolution
Galvanically isolated as a group

Digital Inputs (7)…… 2 Wire Start/Stop
Hand-off Auto (HOA)
3-Wire Start/Stop
Setpoint 1-2
Speed Override
Specific Gravity
Secondary Protect A/B
Digital Reset
E Stop/Permissive
Motor Thermistor
24 VDC Input Voltage
1 mS filtering time

Relay Outputs (3) *Configurable*…… Form-C Switchover Contact
24 VDC or 250 VAC
2A max continuous current

Reference Voltage Output…… 10 VDC ± 0.5%
10mA max current

Auxiliary Voltage Output… 24 VDC ±10%
250 mA max current output

DRIVE PROTECTION

Keypad Failure	Over Current
Earth Fault	Under Voltage
Over Voltage	Over Temperature (Motor)
Over Temperature (VFD)	Over Torque
Phase Loss	Motor Stall

PUMP PROTECTION

Loss of Suction/Dry Run	General Condition
Low Flow	Sleep Function
Run-out Flow	Sensor Failure
Shut-off/Dead Head	Safe Speed Operation
Critical Speed Lockout	

FEATURES:

Smartflow	Multipump (Synchronous Control)
Smartcontrol (PID Torque)	Multipump (Backup)
Cavitation Control	System Curve Compensation
Automatic Fault Reset	Pump Cleaning Sequence

FIELDBUS

Communication Modules…… Modbus, Profibus DP
Ethernet, DeviceNet
ControlNet

Certified for Construction Purposes only when signed

Date……

Customer Name……

Goulds S/N……

Customer P.O #……

Item No……

Copyright 2006 ITT Corp.
No reproduction without permission