PumpSmart PS75
Drive Dimensions and Ratings
Frame R5-NEMA1/IP21

PUMPSMART

PumpSmart PS75 Pump and Motor Control System

The PumpSmart PS75 is a pump and motor control system that provides integral starting, right-sizing, pump protection and process control for all pumping applications. The PumpSmart PS75 is based upon the ABB ACS 550 variable frequency drive. PumpSmart Control Solutions has worked with ABB to incorporate proprietary pump protection & configuration algorithms into the drive to make it more suitable for pumping applications

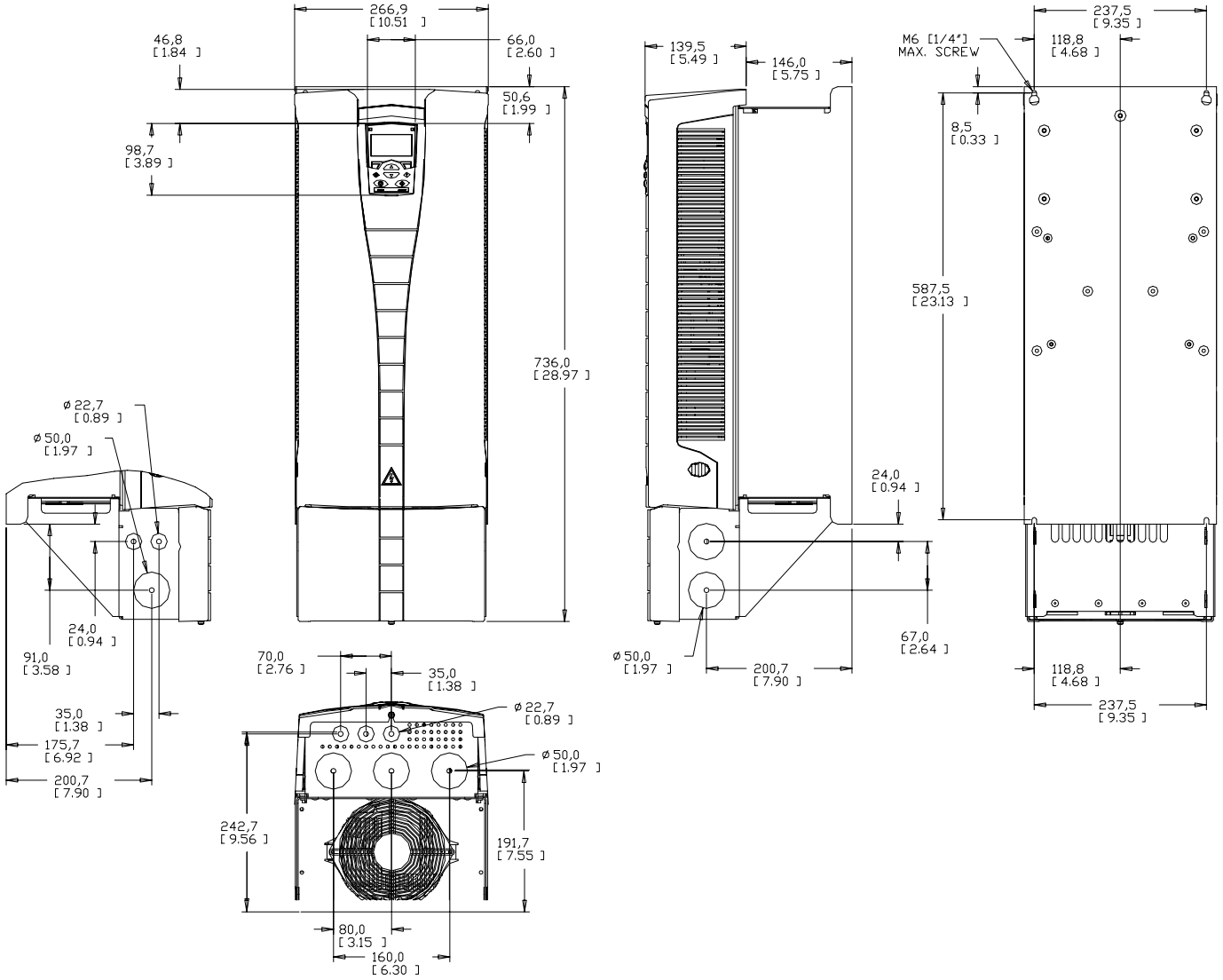

Drive Dimensions

Frame	Height mm [inches]	Width mm [inches]	Depth mm [inches]	Weight kg [lbm]
R5	739 [29.1]	267 [10.5]	286 [11.3]	34 [75]

*Dimensions not for construction

Copyright 2006 ITT Corp. No reproduction without permission

Drawing is not to scale Dimensions in mm(inches)	Issue: 2 deleted item A13 added item A14	Drawn: JCS 5-6-06	Drawing A08389A	Revision 2	Sheet 1 of 4
		Checked: AES 5-6-06			

ITT

PumpSmart PS75
Drive Dimensions and Ratings
Frame R5-NEMA1/IP21

PUMPSMART

Drive Ratings

ITT P/N	Input Voltage VAC	Power P_{N1}		Nominal Current I_{2N2} Amps	Heat Dissipation		Air Flow		Frame	Enclosure Rating	Recommended Main Fuses		
		KW	HP		Watts	BTU/hr	M^3/hr	CFM			IEC269gG (A)	UL class T (A)	Bussmann Type
A08302A29	380 * / 460	55	100	124	1940	6621	168	99	R5	NEMA1 / IP21	160	175	JJS-175

Notes
[1] P_N - Nominal Power Rating at listed voltage rating
[2] I_{2N} - Continuous base current with 10% overload for 1 min / 10 minutes
*- KW rating applies to drives with 380 VAC input voltage

Power Cabling Schematic

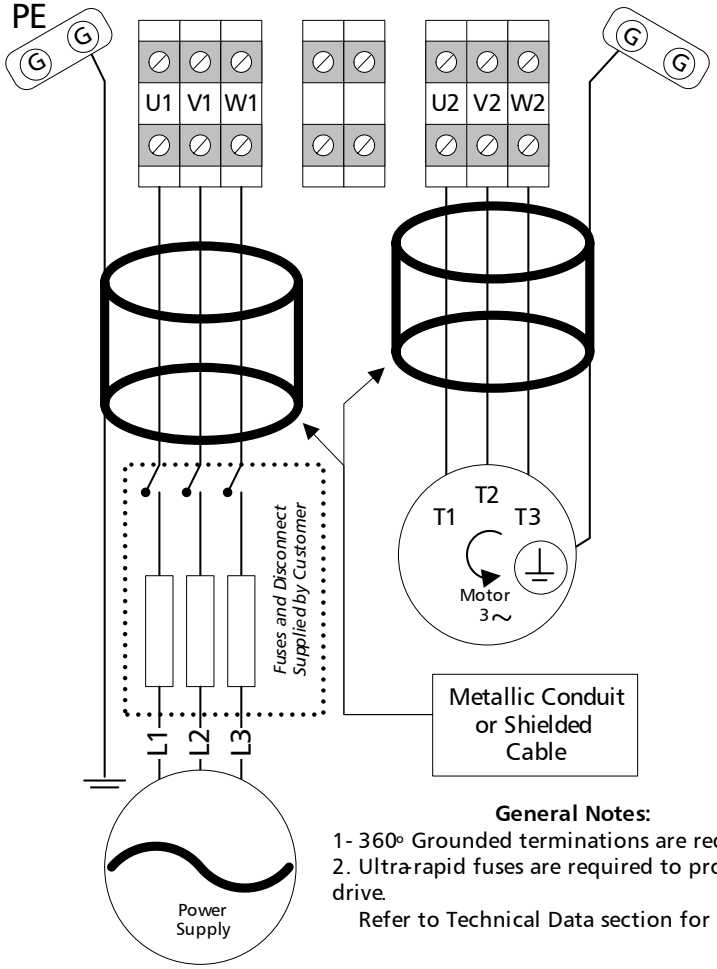

General Notes:
1- 360° Grounded terminations are required
2. Ultra-rapid fuses are required to protect drive.
Refer to Technical Data section for details

Frame Size	U1/V1/W1 – U2/V2/W2 BRK±, UDC± Terminals						Earthing PE Terminal			
	Min.Wire Size		Max.Wire Size		Torque		Max.Wire Size		Torque	
	mm^2	AWG	mm^2	AWG	Nm	Lb-ft	mm^2	AWG	Nm	Lb-ft
R5	16	6	70	2/0	15	11	70	2/0	15	11

Copyright 2006 ITT Corp.
No reproduction without permission

Drawing is not to scale
Dimensions in mm(inches)

Issue: 2 deleted item A13 added item A14

Drawn: JCS 5-6-06

Checked: AES 5-6-06

Drawing A08389A

Revision 2

PS75 Drive Terminal Block Schematic

	X1	Terminal Block		
1	SCR	Signal cable shield connected internally to chassis ground		Analog I/O
2	AI1 (+)	OPTION	Analog Input 1, Programmable External Setpoint J1:AI1 off 2..10VDC ON default J1:AI1 on 4..20mA ON	Analog I/O
3	AGND (-)	Analog Input 1 Ground		Analog I/O
4	+10V	AI Reference Voltage : 10V ± 2%, 10mA max used for AI 1 2-10VDC signals 1K ohm ≤ R ≤10K ohm		Analog I/O
5	AI2 (+)	OPTION	Analog Input 2, Programmable Primary Process Transmitter J1:AI2 off 2..10VDC ON J1:AI2 on 4..20mA ON default (Process Control Only)	Analog I/O
6	AGND (-)	Analog Input 2 Ground		Analog I/O
7	AO 1 (+)	OPTION	Analog Output 1, programmable 4-20mA Output assigned in parameter 1501. Default is speed	Analog I/O
8	AO 2 (+)		Analog Output 2, programmable 4-20mA Output assigned in parameter 1507. Default is current	Analog I/O
9	AGND (-)	Analog Output Ground		Analog I/O
10	+24VDC	Process Transmitter / DI power source 24VDC / 250mA (reference to GND) Used if PumpSmart is powering the process transmitter and / or digital inputs		Digital I/O and Auxiliary Power
11	GND			Digital I/O and Auxiliary Power
12	DCOM			Digital I/O and Auxiliary Power
13	DI 1	OPTION	2 - Wire Start / Stop Change parameter 1002 to 2W DI 1 (1). Default is Keypad Start/Stop	Digital I/O and Auxiliary Power
14	DI 2		Used with 3- Wire Start / Stop	Digital I/O and Auxiliary Power
15	DI 3		Speed Control - Constant speed selection Process Control - Selects PID Set2	Digital I/O and Auxiliary Power
16	DI 4		Speed Control - Constant speed selection Process Control - Programmable Digital Input Not Used	Digital I/O and Auxiliary Power
17	DI 5		Fault Reset Input assigned in parameter 1604	Digital I/O and Auxiliary Power
18	DI 6		Run Enable Input assigned in parameter 1601	Digital I/O and Auxiliary Power
19	RO1C COM	OPTION	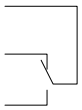 Assignable Relay (RO1) The output of this relay is assignable by parameter 1401 Default: Ready (19 and 21 connected)	Relay Outputs
20	RO1 NC			Relay Outputs
21	RO1 NO			Relay Outputs
22	RO2C COM		Assignable Relay (RO2) The output of this relay is assignable by parameter 1402 Default: Run (22 and 24 connected)	Relay Outputs
23	RO2 NC			Relay Outputs
24	RO2 NO			Relay Outputs
25	RO3C COM		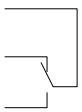 Assignable Relay (RO3) The output of this relay is assignable by parameter 1403 Default: Fault (25 and 27 connected)	Relay Outputs
26	RO3 NC			Relay Outputs
27	RO3 NO			Relay Outputs

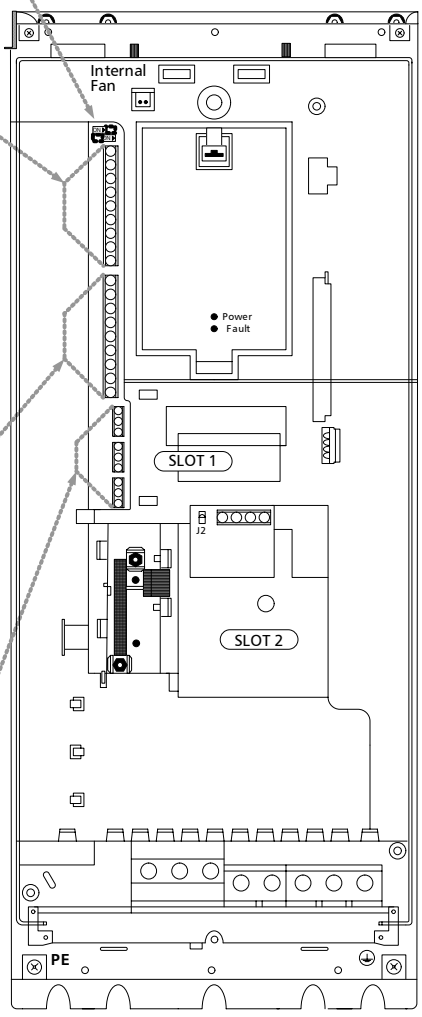

View of I/O Connection board (OMIO)

ACH 550

Copyright 2006
ITT Corp.
No reproduction without permission

Drawing is not to scale
Dimensions in mm(inches)

Issue: 2 deleted item A13 added item A14

Drawn: JCS 5-6-06

Checked: AES 5-6-06

Drawing A08389A

Revision 2

PumpSmart® PS75

Hardware: ABB ACH550 Drive

CERTIFICATIONS

CE Marked
UL Listed
Canadian UL Listed

INPUT POWER

Voltage.....	208..240 VAC 1P and 3P +10%/-15% 380…480 VAC 3 Phase +10%/-15% 500..600 VAC 3 Phase +10% / -15%
Imbalance.....	Max +- 3% of Nominal Phase to Phase Input Voltage
Frequency.....	48..63 Hz
Fundamental Power..... Factor (cos Ø1)	0.98

MOTOR CONNECTION

Voltage.....	0 to Usupply
Frequency.....	0-500 Hz
Overload Capacity....	Normal Use 1.1 x Rated Current for 1 min every 10 min
Switching Frequency.....	Default 4kHz, Selectable 1,4,8 and 12 kHz 1-150 hp (.75-110 kW), Selectable 1,4 and 8 kHz 150-550 hp (110-355 kW)
Motor Control.....	Sensorless Vector Control
Speed Control.....	Static Accuracy 20% of motor nominal slip
Drive Nominal Output ...	6:1 Maximum
Current.....	Motor nominal Current

ENVIRONMENTAL LIMITS

Enclosures	NEMA Type 1/IP21 NEMA TYPE 12/IP54 (U1/01 Only)
Temperature.....	5…104F (-15..40C) No frost Allowed
Humidity.....	<95% Relative Humidity, Non-condensing
Altitude.....	0..3300 Ft (0..1000M) Standard
Shock.....	Not Allowed
Free Fall.....	Not Allowed
Vibration.....	5-13.2 Hz 1mm (.04 in)

STANDARD INPUT/OUTPUT

2 Analog Inputs.....	(0) 4…20mA, Rin>100 ohm single-ended or (0) 2..10VDC, Rin>312k ohm single-ended, resolution 0.1%, accuracy +-1%. Default: AI1 Voltage, AI2 Current Configurable
2 Analog Outputs.....	(0) 4…20mA, Load < 500 ohm, Configurable
Auxiliary Voltage.....	24 VDC +- 10%, max. 250 mA
Digital Inputs (6).....	12V…24VDC with internal or external supply,input impedance 1.5 kohm Common Configurations: 2-Wire Start/Stop, 3-Wire Start/Stop,Hand-off-Auto Dual Setpoints, Secondary Protect A, Secondary Protect B, Run Enable, E-Stop, Fault Reset, Constant Speed Select PID Set Activation
Relay Outputs (3).. ..... *Configurable*	Form-C Switchover Contact Max Switching Voltage 250VAC / 30VDC Max Switching Current 6A / 30VDC 1500VA/250VAC 2A rms max continuous current Min Load:500mW (12V,10mA)
Reference Voltage	10 VDC ± 2% 10mA max current R <10 Kohm

DRIVE PROTECTION

Keypad Loss	Wiring Fault
Earth Fault	Over Current
Over Voltage	Drive Overtemp
Under Voltage	Phase Loss
Motor Temp	Short Circuit
Drive Overload	Communication Failure
Run Enable	

PUMP PROTECTION

Closed Valve	Runout Flow
Loss of Suction/Dry Run	Sensor Failure
Low Flow	Critical Speed (Speed Control)

FIELDBUS

Modbus (built-in std)	ControlNet
DeviceNet	Profibus-DP
EtherNet	

Certified for Construction Purposes only when signed

Date.....

Customer Name.....

Goulds S/N.....

Customer P.O #.....

Item No.....

Copyright 2006 ITT Corp.
No reproduction without permission

Drawing is not to scale
Dimensions in mm(inches)

Issue: 2 deleted item A13 added item A14

Drawn: JCS 5-6-09

Checked: AES 5-6-09

Drawing A08389A

Revision 2