ITT
ENGINEERED FOR LIFE

PRO services

Pumpsmart PS220
Drive Dimensions and Ratings
Frame R8 - NEMA2 / IP22
ACS880-07

PumpSmart®

PumpSmart PS220 pump and motor Control System

The PumpSmart PS220 is a pump and motor control system that provides integral starting, right–sizing, pump protection and process control for all pumping applications. The PumpSmart PS220 is based upon the ABB ACS880–07 variable frequency drive platform. PumpSmart Control Solutions has worked with ABB to incorporate proprietary pump protection, process control and configuration algorithms into the drive to make it more suitable for pumping applications

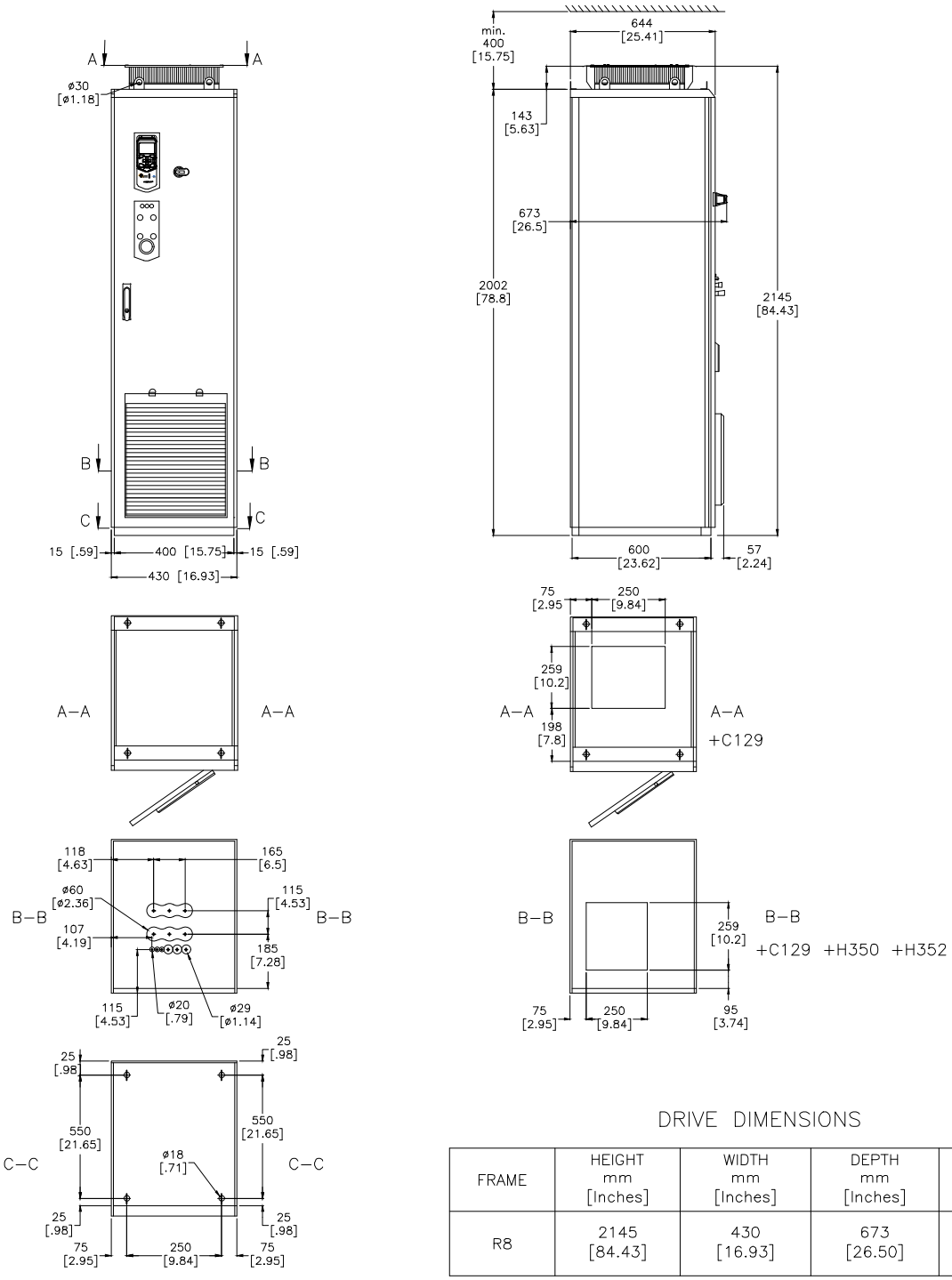

DRIVE DIMENSIONS

FRAME	HEIGHT mm [Inches]	WIDTH mm [Inches]	DEPTH mm [Inches]	WEIGHT Kg [lbs]
R8	2145 [84.43]	430 [16.93]	673 [26.50]	265 [590]

1–For marine construction (option +C121) extra height is 10 mm (0.39 in.) due to the fastening bars at the bottom of the cabinet.
2–Extra width with brake resistors (option +D151): SAFURxxxFxxx 400 mm (15.75in.), 2xSAFURxxxFxxx 800mm(31.49 in.). Extra width for frames R6 to R8 with EMC filter (option +E202): 200mm (7.87in.). Total width of R6 to R9 frame sizes with molded case circuit breaker (option +F289) is 830mm (32.68in.)
3–For drives with marine fastening bars (option +C121): Depth is 757 mm.

Copyright 2016
ITT. corp
No reproduction without permission

Drawing is not to scale
Dimensions in mm(Inches)

Issue:

Drawn: HCLT 12–22–16
Checked: BDECOOK 12–22–16

Drawing
K05726A

Revision
2

ITT
ENGINEERED FOR LIFE

PRO services

Pumpsmart PS220
Drive Dimensions and Ratings
Frame R8-NEMA2 / IP22
ACS880-07

PumpSmart®

Drive Ratings

ITT P/N	ABB P/N	Input Voltage (VAC)	Power[1]		Rated Current[2] (A)	Heat Dissipation		Air Flow		Frame	Enclosure Rating	Recommended Main Fuses	
			HP	kW		Watts	BTU/hr	m^3/hr	CFM			UL Type Bussmann	IEC Type Bussmann
K03563A05	ACS880-07-246A-3	380 - 415	NA	132	234	3800	12966	1750	1130	R8	NEMA 2 IP22	NA	170M5808D
K03563A06	ACS880-01-293A-3	380 - 415	NA	160	278	4400	15013					NA	170M5810D
K03556A05	ACS880-07-0240A-5	380 - 500	200	132	240	3800	12966					DFJ-400	170M5808D
K03558A05	ACS880-07-0142A-7	525 - 690	150	110	144	3800	12966					DFJ-250	170M3816D
K03558A06	ACS880-07-0174A-7	525 - 690	200	132	180	4400	15013					DFJ-300	170M3817D

1– Nominal Power Rating at listed voltage rating
2– Contiunous base current with 10% overload for 1 min/5 minutes

Power Cabling Schematic

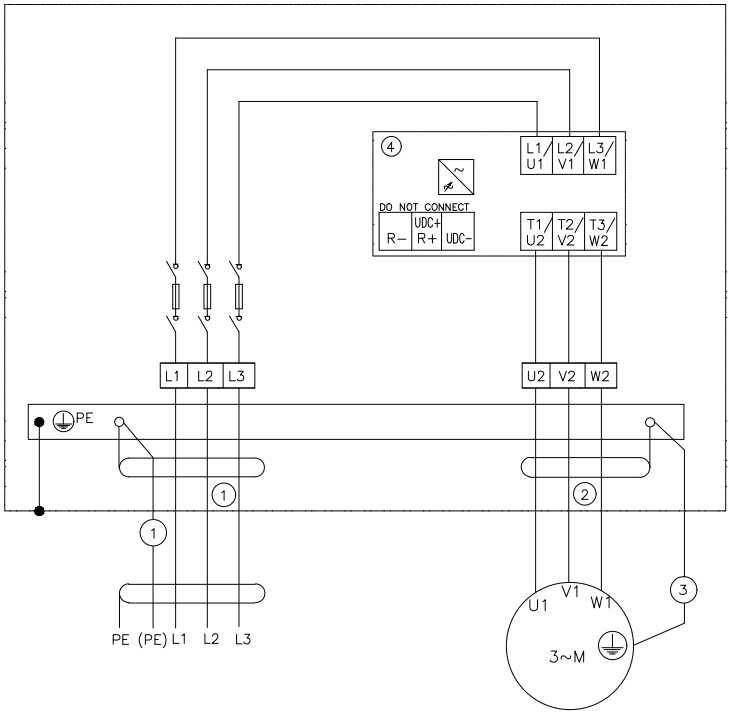

1 360–degree grounding is recommended if shielded cable is used. Ground the other end of the input cable shield or PE conductor at the distribution board.

2 360–degree grounding is required.

3 Use a separate grounding cable if the shield does not meet the requirements of IEC 61439–1 and there is no symmetrically constructed grounding conductor in the cable.

4 Drive module.

Frame size	Terminals L1,L2,L3,U2,V2,W2				Earthing PE Terminal			
	Max. Wire Size AWG (mm^2)	Screw	Torque		Max.Wire Size AWG (mm^2)	Screw	Torque	
			N–m	Lb–ft			N–m	Lb–ft
R8	2 X 500 MCM 2 X 350 MCM (1 X 240 or 2 X 185)	M12	50...75	37...55	350 MCM (185)	M10	30...44	22...32

Copyright 2016
ITT. corp
No reproduction without permission

Drawing is not to scale
Dimensions in mm(Inches)

Issue:

Drawn: HCLT 12–22–16
Checked: BDECOOK 12–22–16

Drawing K05726A

Revision 2

PumpSmart® PS220

Drive Hardware: ABB ACS880−07

CERTIFICATIONS

600VAC and Below
UL Listed
Canadian UL Listed

INPUT POWER

Voltage.....380...690 VAC 3 Phase ±10%−15%
Overload.....110% for 1min/5 min,
140−150% for 10 sec at startup
Frequency.....48...63Hz
Fundamental Power
Factor(CosΦ_1) .....0.98 at nominal load
Efficiency.....98% (at nominal power)

MOTOR CONNECTION

Voltage.....0 to U1, 3−Phase Symmetrical,
Umax at the field weakening point
Frequency.....0...500Hz
Field Weakening Point.....5...500Hz
Switching Frequency .....2.7KHz (typically)

Short Circuit Withstand Rating.....
.....100,000AIC(UL) R1−R9
when protected by fuses given
in the hardware manual.
Connection U2, V2, W2

ENVIRONMENTAL LIMITS

Enclosures.....NEMA2/IP22

Temperature.....32°to122°F(0°to50°C)Standard
104..122°F(40−50C) with
de−rating (1%/1C)
Humidity.....5...95% Relative Humidity
Altitude.....0..3300 Ft(0−1000M) Standard
3300..13,123Ft (1000..4000M) with
de−rating (1%/100M)
Vibration.....Max.1mm(0.04 in.) 5−13.2 Hz
Max.7 m/s^2 (23ft/s^2) (13.2−100Hz)
Sinusoidal
Shock, Free Fall.....Not Allowed

ANALOG INPUTS

Two (2) Programmable Differential Inputs
Two (2) Current or Voltage Signals.....0(4) to 20 mA, Input Resistance
RI=> 100 ohms or
−10Vdc /0(2) to+10Vdc,
Input Resistance RI=> 200 Kohms
Common Mode Voltage.....+/−15Vdc,max.
Common Mode Rejection Ratio.....> 60dB at 50Hz
Resolution.....0.025% (12bit) (11 bit+Sign bit)
Accuracy.....+/−0.5% of full Scale Range
Input Updating Time.....1 ms (Primary Control Program)
Optional Isolation.....Available through optional external
module

ANALOG OUTPUTS

Two (2) Programmable Current Outputs
Signal Level.....0(4) to 20mA
Resolution.....0.025% (12bit) (11 bit+Sign bit)
Accuracy.....+/−1% of Full Scale Range
Maximum Load Impedance....500 ohms
Output Updating Time.....1 ms (primary Control Program)
Frequency Range.....0−300Hz

DIGITAL INPUTS

Six(6) Programmable Digital Inputs(Common Grounds), plus One(1)
Start Interlock
Isolation.....Isolated
Isolation Test Voltage.....500VAC, 1 minute
Input Type.....NPN/PNP (DI1....D15), NPN (D16)
Signal Level.....24Vdc
Rin.....2.0 kOhms
Logical switch thresholds.....<5Vdc at "0",>15Vdc at "1"
Input Current.....15mA, Digital Input 1 to Digital Input
5, 5mA Digital Input 6
Filtering Time Constant.....Hardware Filter .04ms.
Input Updating Time.....Digital Filtering up to 8ms.(Primary
Control Program)
Internal 24Vdc Supply for Digital Inputs
Voltage.....24Vdc
Maximum Current.....200mA
Connector.....XD24.2 and XD24.4
Protection.....Short Circuit Proof
An external 24 Vdc supply may be used instead of the Internal supply

DIGITAL INPUTS/OUTPUTS

Two(2) programmable Digital Inputs/Outputs
Isolation.....Isolated
Input Configuration.....DIO1 frequency input(0...16KHz
with 4 microsecond hardware filtering)
Output Configuration.....DIO2 frequency output(0...16KHz
with 4 microsecond hardware filtering)
Signal Level.....24Vdc
Rin.....2.0Kohm
Logical Input switch thresholds...<5Vdc at "0",>15Vdc at "1"
Filtering Time Constant.....0.25ms
As output.....Total output current from
+24VD is limited to 200ma.

RELAY OUTPUTS

Three Programmable Relay Outputs
Switching Capacity.....2 A at 30Vdc or 250Vac
Maximum Continuous Current.....IC=2 Amps RMS
Protection .....Varistors (250V)
Output Updating Time.....1 ms (Primary Control
Program)

REFERENCE POWER SUPPLY

Voltage.....+10Vdc,0,−10Vdc+/−0.5% at
25°C (77°F)
Maximum Load.....10mA
Applicable Potentiometer..1 k−ohm to 10 k−ohm

FIELDBUS

Communication Modbus, Profibus DP
Modules..... Ethernet, DeviceNet

Copyright 2016
ITT. corp
No reproduction without
permission